DOUBLE HUNG PICTURE REPLACEMENT SASH

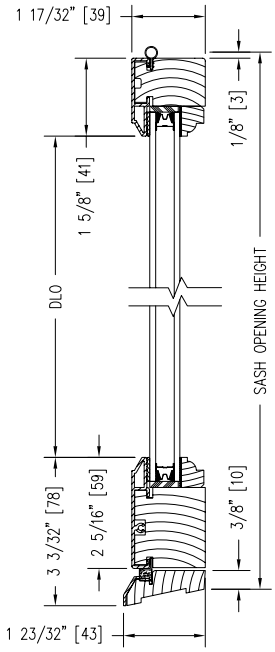

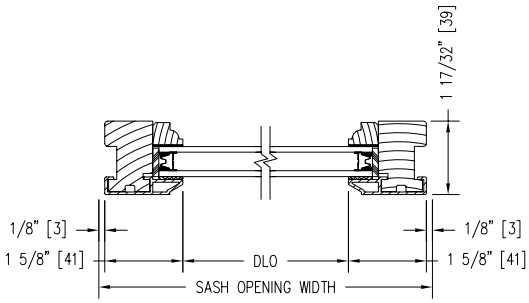

Notes:

Dynamically configure section details to your specific needs by going to EagleWindow.com, select WIntelligence.
Eagle Window & Door reserves the right to change the specifications without notice.

DRAWING # AD3013
SCALE: 3"=1'-0"
REVISON: 2/2/09

Eagle WINDOWS & DOORS an Andersen Company