4 9/16" INSWING FRENCH DOOR VERTICAL FACTORY MULLS

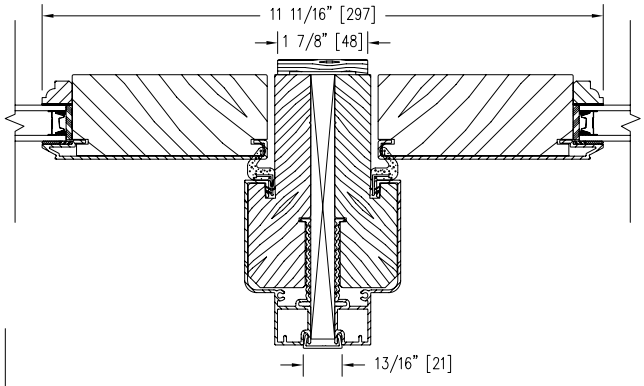

1/2" MULL

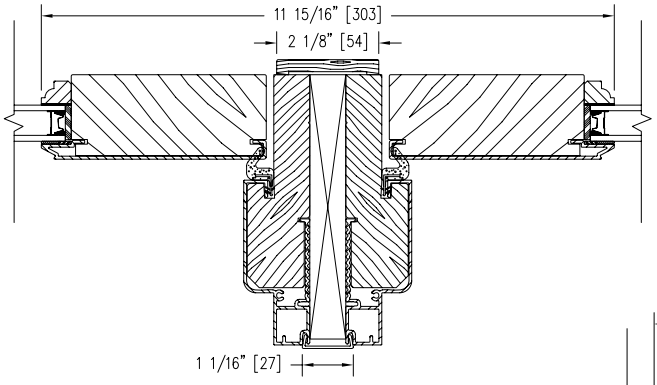

3/4" MULL

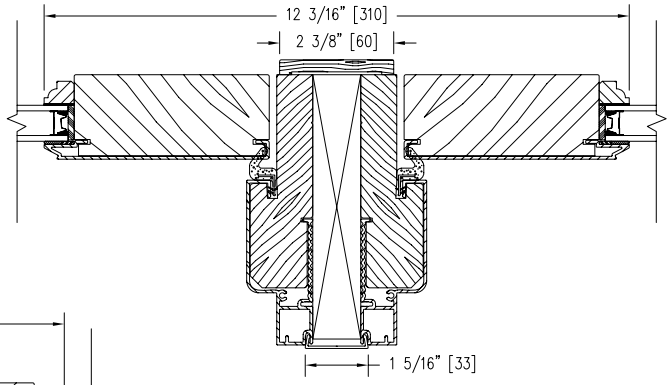

1" MULL

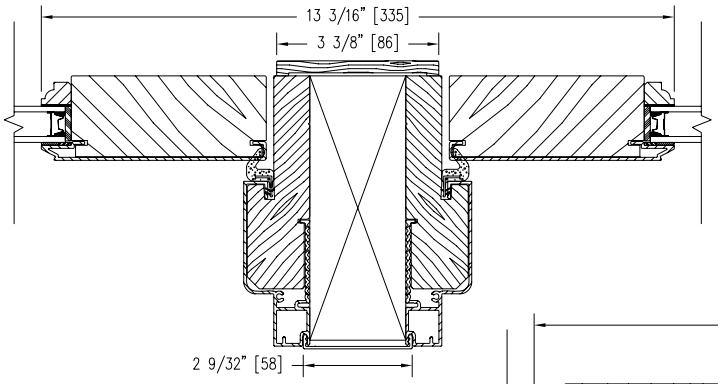

2" MULL

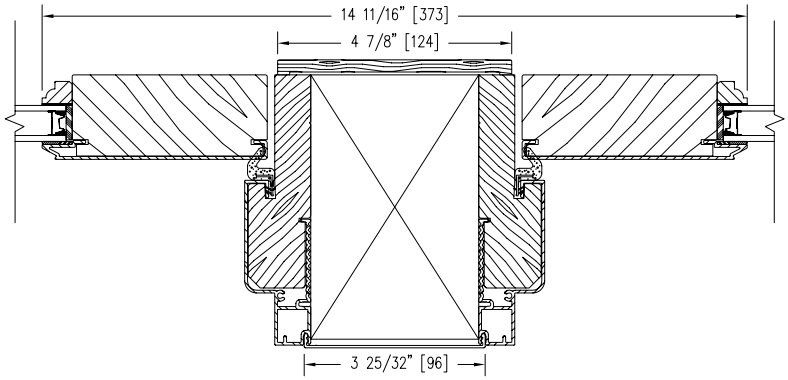

3 1/2" MULL

Notes:

Dynamically configure section details to your specific needs by going to EagleWindow.com, select WIntelligence.
Eagle Window & Door reserves the right to change the specifications without notice.

DRAWING # AD3125
SCALE: 3"=1'-0"
REVISON: 2/2/09

Eagle WINDOWS DOORS an Andersen Company